Thumbwheel Switch Setting Type Temperature Controller

■ Features

- Various size as DIN specifications (W48×H48, W48×H96, W72×H72, W96×H96mm)
- Various control output (Relay/SSR drive/current)
- Dual setting for simultaneous control for heater and cooler (T4LP)

⚠ **Please read "Safety Considerations" in operation manual before using.**

■ Ordering Information

T 3 S □ - B 4 R P 4 C - N

New※1	N	New type
Temperature unit	C	℃
	F	℉
Temperature range※4	0	-99 to 199℃, -99.9 to 199.9℃
	1	0 to 99.9℃
	2	0 to 200℃, 0 to 200.0℃
	4	0 to 400℃
	8	0 to 800℃/℉
	A	0 to 999℃
	C	0 to 1200℃
	F	600 to 1600℃
Input type※4	P	DPt100Ω
	J	J(IC)
	K	K(CA)
	R	R(PR)
Control output※3	R	Relay output
	S	SSR drive output
	C	Current output
Power supply	4	100-240VAC 50/60Hz
Control method	B	ON/OFF control, Proportional control
Alarm/Sub output※3	No-mark	None
	A	Alarm output
	S	Sub output
	P	Dual setting output
Size	S	DIN W48×H48mm (8-pin plug type)※2
	M	DIN W72×H72mm
	H	DIN W48×H96mm
	L	DIN W96×H96mm
Digit	3	999 (3-digit)
	4	9999 (4-digit)
Item	T	Temperature Controller

※1: Name plate and connections are different from previous T3/T4 Series.
※2: Sockets (PG-08, PS-08(N)) are sold separately.
※3: Output by Series

Series	T3S	T3H	T3HA	T3HS	T4M	T4MA	T4L	T4LA	T4LP
Control output	●	●	–	–	●	–	●	–	–
Control output+Alarm/Sub output	–	–	●	●	–	●	–	●	–
Dual setting output	–	–	–	–	–	–	–	–	●

※4: Input type and temperature range by Series

Input type			Series / Model	T3S	T3H	T3HA	T3HS	T4M T4MA	T4L T4LA	T4LP
Thermocouples	K(CA)	0 to 400℃	4	●	●	●	●	●	●	●
		0 to 800℃	8	●	●	●	–	●	●	●
		0 to 999℃	A	–	●	●	–	–	–	–
		0 to 1200℃	C	–	–	–	–	●	●	●
	J(IC)	0 to 200℃	2	●	–	–	–	–	–	–
		0 to 400℃	4	●	●	●	●	●	●	●
		0 to 800℉	8	–	●	–	–	–	–	–
	R(PR)	600 to 1600℃	F	–	–	–	–	●	●	●
RTD	DPt 100Ω	-99.9 to 199.9℃	0	–	–	–	–	●	●	–
		-99 to 199℃	0	–	●	●	–	–	–	–
		0 to 99.9℃	1	●	●	–	–	–	–	–
		0 to 200.0℃	2	–	–	–	–	–	–	●
		0 to 200℃	2	●	–	–	–	–	–	–
		0 to 400℃	4	●	●	●	●	●	●	●

※Please contact us for temperature unit ℉ model.

■ Specifications

Series		T3S	T3H	T3HA	T3HS	T4M	T4MA	T4L	T4LA	T4LP
Power supply		100-240VAC～ 50/60Hz								
Allowable voltage range		90 to 110% of rated voltage								
Power consumption		Max. 5VA								
Display method		7-segment (red) LED method								
Character size (W×H)		3.8×7.6mm	6.0×10.0mm					8.0×14.2mm		
Input type	RTD	DPt100Ω (Allowable line resistance max.5Ω per a wire)								
	TC	K(CA), J(IC)				K(CA), J(IC), R(PR)				
Display accuracy※1	RTD / TC	●At room temperature (23ºC ± 5ºC): (PV ± 0.5% or ±1ºC, select the higher one) ± 1-digit ●Out of room temperature range: (PV± 0.5% or ±2ºC, select the higher one)± 1-digit								
Control output	Relay	OUT1: 250VAC～ 5A 1c, OUT2: 250VAC～ 2A 1c※2								
	SSR	Max. 12VDC⎓±2V 20mA								
	Current	DC4-20mA (resistive load max. 500Ω)								
Alarm/Sub/ Dual setting output		—		250VAC～ 2A 1c		—	250VAC～ 2A 1a	—	250VAC～ 2A 1c	
Sampling period		100ms								
Control method		ON/OFF, Proportional control								
Hysteresis		F.S. 0.5%	F.S. 0.2 to 3% variable							
Proportional band		F.S. 3%	F.S. 1 to 10% variable							
Proportional cycle		20 sec								
RESET range		F.S. -3 to 3% variable								
Relay life cycle	Mechanical	Over 5,000,000 times								
	Electrical	OUT1: Over 100,000 times, OUT2: Over 200,000 times								
Dielectric strength		2,000VAC 50/60Hz for 1min (between input terminal and power terminal)								
Vibration		0.75mm amplitude at frequency of 10 to 55Hz (for 1 min) in each X, Y, Z direction for 2 hours								
Insulation resistance		Over 100MΩ (at 500VDC megger)								
Noise immunity		Square-wave noise by noise simulator (pulse width 1μs) ±2kV R-phase and S-phase								
Memory retention		Approx. 10 years (when using non-volatile semiconductor memory type)								
Environ-ment	Ambient temperature	-10 to 50℃, Storage: -20 to 60℃								
	Ambient humidity	35 to 85% RH, Storage: 35 to 85% RH								
Weight※3		Approx. 135g (approx. 95g)	Approx. 239g (approx. 176g)			Approx. 246g (approx. 180g)		Approx. 310g (approx. 222g)		

※1: In case of the T3S Series and the decimal point display models
At room temperature (23ºC±5ºC): (PV ±0.5% or ±2℃, select the higher one)±1-digit
Out of room temperature range: (PV ±0.5% or ±3℃, select the higher one)±1-digit
※2: Dual setting output of the T4LP is fixed as relay output and, it is also available as alarm output.
※3: The weight includes packaging. The weight in parenthesis is for unit only.
※Environment resistance is rated at no freezing or condensation.

■ Unit Description

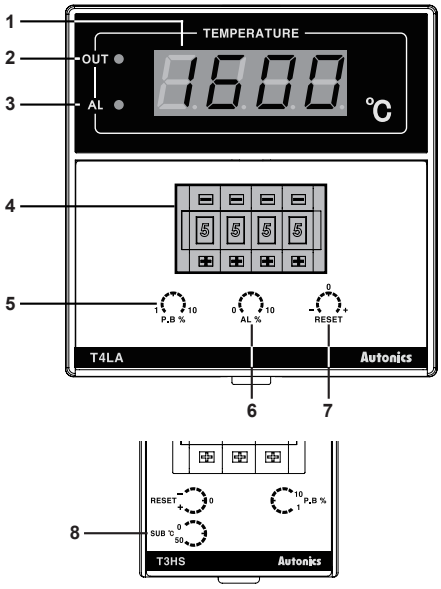

1. Present temperature (PV) display
It displays present temperature.

2. Control output (OUT) indicator
It turns ON when control output is ON.
※In case of the T3S, the upper DOT of last digit flashes.

3. Alarm output (AL) indicator
It turns ON when alarm output is ON. (only for alarm output model)
In case of the sub output model (T3HS), the sub (SUB) indicator turns ON when sub output is ON.

4. Set value (SV) thumbwheel switch
Switch for setting temperature.
(-) button: Decreases number, (+) button: Increases number
If the setting is out of the temperature range of temperature sensor, the present temperature (PV) display part flashes 5u.Er and the present value in turn.
※The models which temperature range is 0 (-99.9 to 199.9℃, -99 to 199℃) of temperature sensor DPt100Ω are only set 1↔0↔ (-).
※The dual setting output model (T4LP) has two thumbwheel switches.

LO SET (low set output)

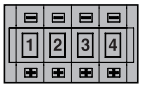

HI SET (high set output)

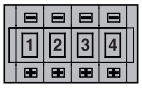

LO SET (low set output) heating control, HI SET (high set output): cooling control

5. Hysteresis/Proportional width volume switch (except T3S)
ON/OFF control: Setting for hysteresis. [Setting range] F.S. 0.2 to 3% (For T3S, F.S. 0.5% fixed)
Proportional control: Setting for proportional width. [Setting range] F.S. 1 to 10% (For T3S, F.S. 3% fixed)
Proportional cycle: 20 sec fixed

6. Alarm output value volume switch (only for alarm output model)
It sets alarm output value. [Setting range] F.S. 0 to 10%

7. RESET volume switch
In case of proportional control, it sets offset. [Setting range] F.S. -3 to 3%

8. Temperature setting of sub output volume switch (only for T3HS)
It sets temperature of the sub output. This output operates as deviation low-limit alarm based on the set sub-output temperature (SV). Setting range: 0 to 50℃

■ Connections

※Use teminals of size specified below.

	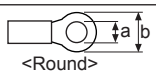 <Round>	 <Forked>
a	Min. 3.5mm	Min. 3.5mm
b	Max. 7.2mm	Max. 7.2mm

● T3S

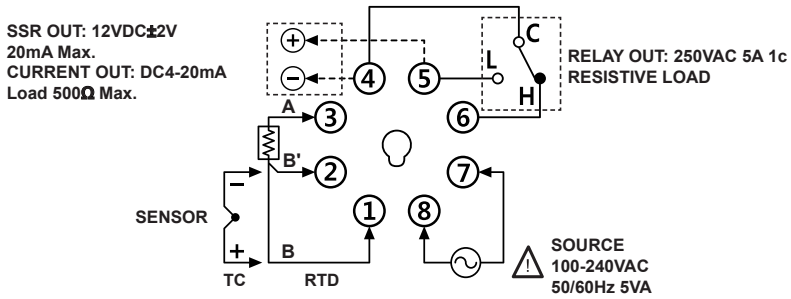

● **T4M/T4MA**

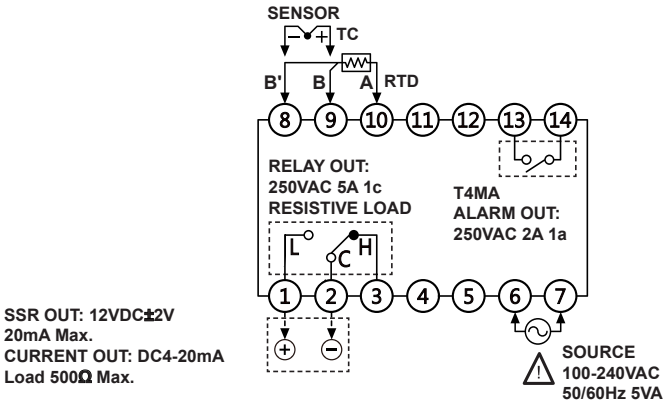

● **T3H/T3HA/T3HS**

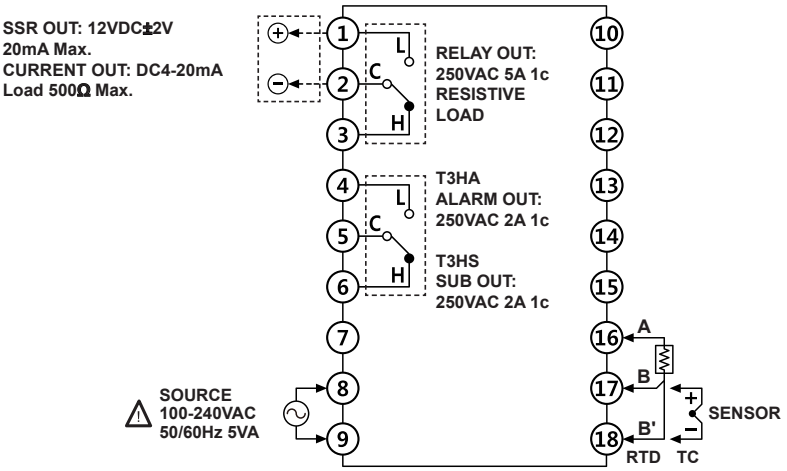

● **T4L/T4LA/T4LP**

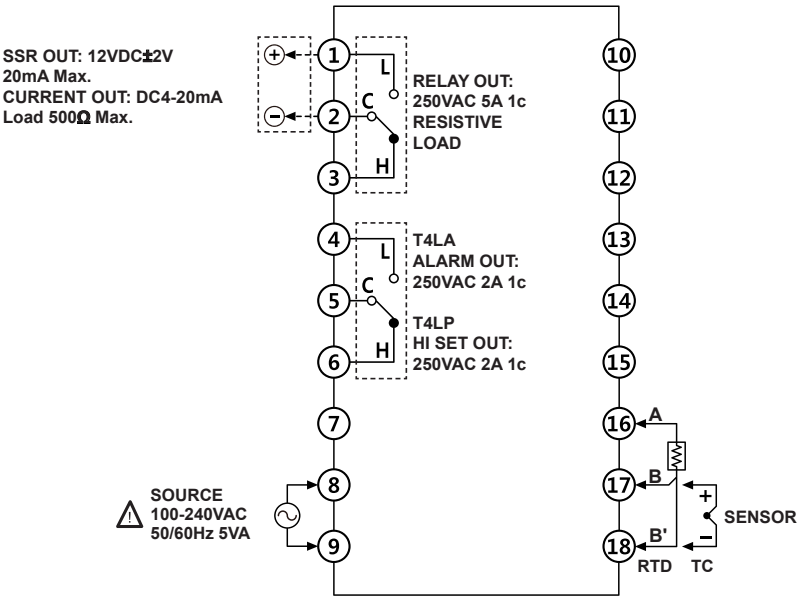

■ Dimensions

(unit: mm)

● T3S

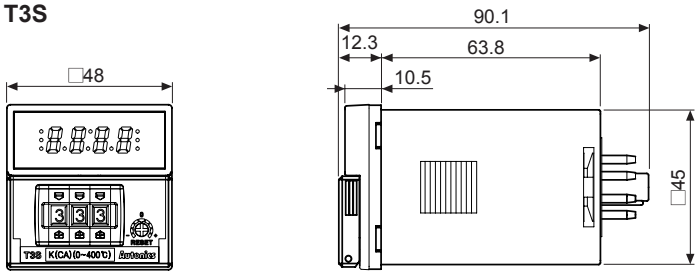

● T3H

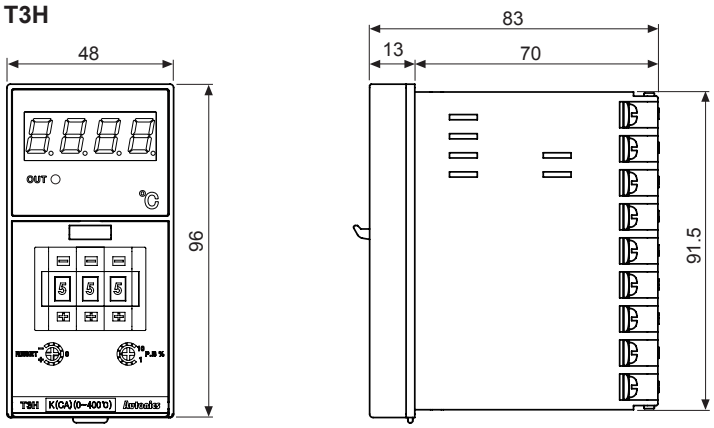

※T3HA, alarm output model, has the alarm output value volume switch.
※T3HS, sub output model, has the temperature setting of sub output volume switch.

● T4M

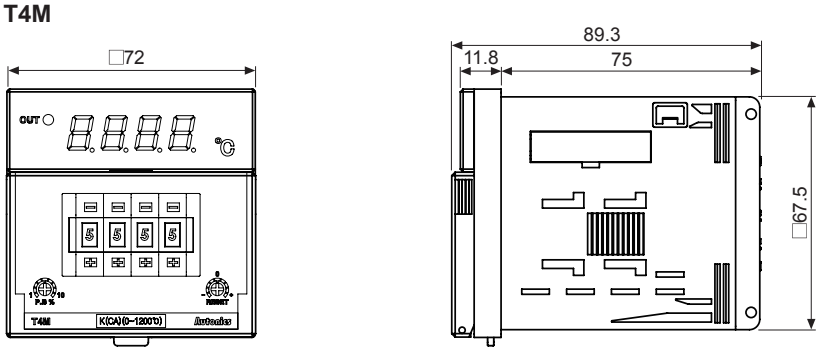

※T4MA, alarm output model, has the alarm output value volume switch.

● T4L

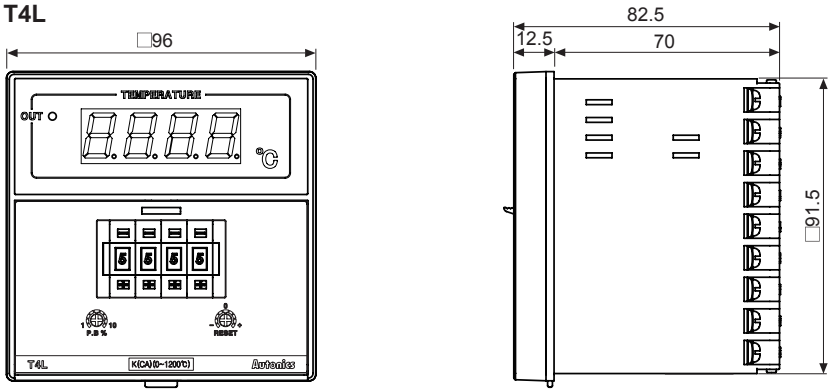

※T4LA, alarm output model, has the alarm output value volume switch.
※T4LP, dual setting output model, has the two thumbwheel switches.

● Bracket

●T3S

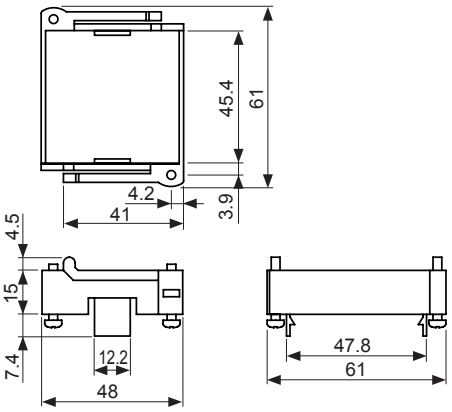

●T3H/T4M/T4L

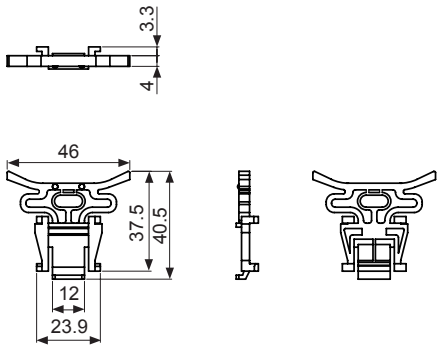

● Terminal cover (sold separately)

●RMA-COVER (72×72mm)

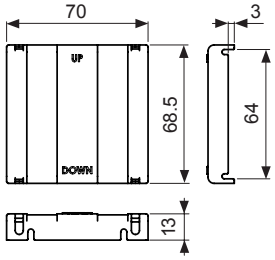

●RLA-COVER (96×96mm)

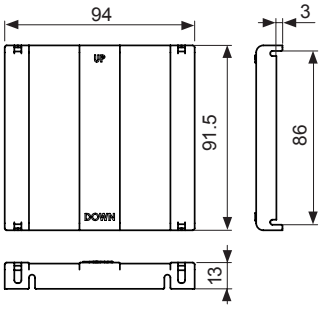

●RHA-COVER (48×96mm)

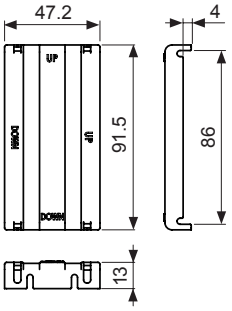

●Panel cut-out

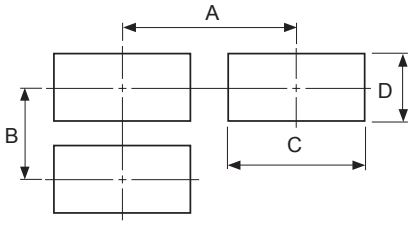

Series \ Size	A	B	C	D
T3S	Min. 65	Min. 65	$45^{+0.6}_{0}$	$45^{+0.6}_{0}$
T3H	Min. 65	Min. 115	$45^{+0.6}_{0}$	$92^{+0.8}_{0}$
T4M	Min. 90	Min. 90	$68^{+0.7}_{0}$	$68^{+0.7}_{0}$
T4L	Min. 115	Min. 115	$92^{+0.8}_{0}$	$92^{+0.8}_{0}$

■ Function

1. Control method

1)ON/OFF control

Comparing the present measured temperature and the set temperature, the temperature controller turns ON/OFF of the load power. Interval between ON and OFF of control output is set by the set hysteresis. When hysteresis of control output is too narrow, hunting (overshoot, chattering) may occur by external noise.

[Setting range of Hysteresis] F.S. 0.2 to 3%
(In case of T3S, F.S. 0.5% fixed)

※Control method setting switch

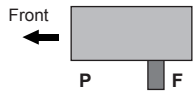

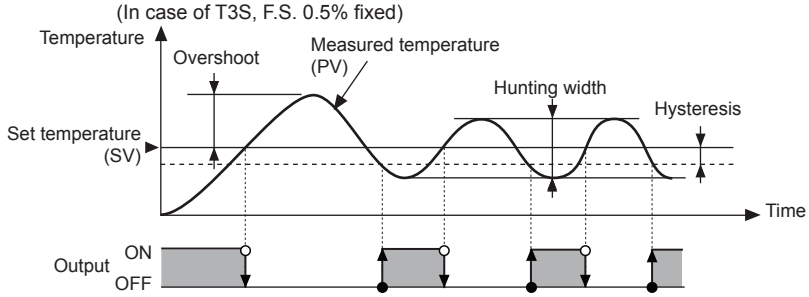

2)Proportional control

Proportional control has control output which is proportional to deviation from the present temperature to the set temperature in the proportional band to the set temperature.

※Control method setting switch

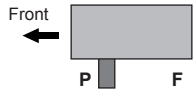

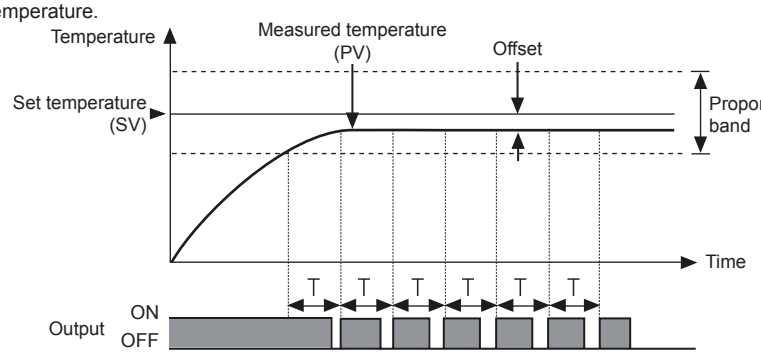

※T: Proportional band is fixed as 20 sec.

It is available to control without overshoot or hunting comparing ON/OFF control but it may cause offset. Correct the offset with the RESET volume switch.

[Setting range of Proportional band] F.S. 1 to 10% (In case of T3S, F.S. 3% fixed)

[Setting range of RESET] F.S. -3 to 3%

2. Alarm output

Alarm temperature is applied to the high/low-limit based on the set temperature. Alarm output operates deviation high/low-limit.

Setting range of Alarm temperature: F.S. 0 to 10%

E.g.) When F.S. is 400℃ and max. alarm temperature (F.S. 10%) is 40℃.
When the set temperature is set as 100℃, alarm output operation range is 140℃ to 60℃.

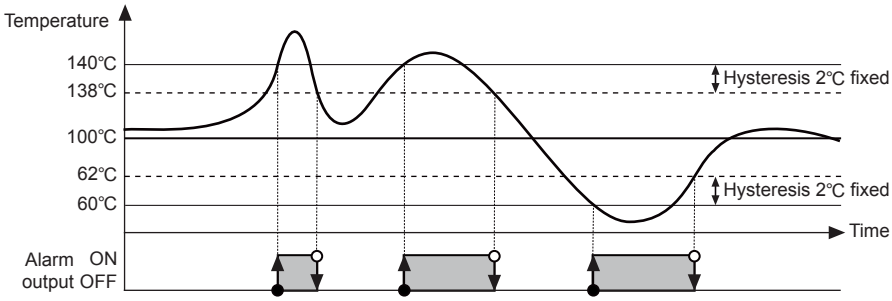

3. Sub output (Only for T3HS)
Only the T3HS model has sub output. This output operates as deviation low-limit alarm.
[Setting range of Sub output]: 0 to 50℃
E.g.)Set temperature is set as 100℃ and sub-output is set as 20℃

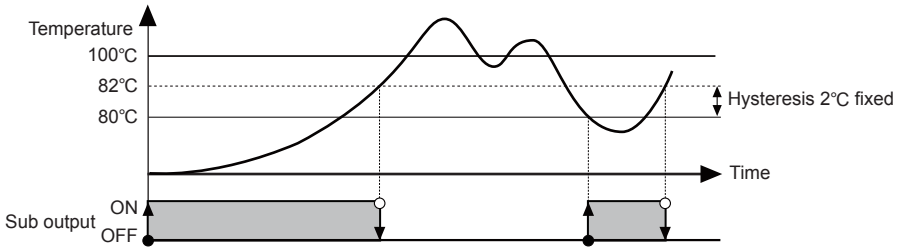

4. Dual setting output (Only for T4LP)
Only the T4LP model has dual setting output.
-LO SET (low set output: ON/OFF control (Hysteresis: F.S. 0.2 to 3%),
Proportional control (Proportional band: F.S. 1 to 10%)
-HI SET (high set output): Absolute value high-limit alarm output (Hysteresis: 2℃ fixed)
E.g.)T4LP, temperature sensor: DPt100, temperature range: 0 to 400℃

Type	Set temperature	Output	Hysteresis
LO SET (low set output)	80℃	ON/OFF control	0.5% (400×0.5%=2℃)
HI SET (High set output)	120℃	Absolute value high-limit alarm output	2℃ (fixed)

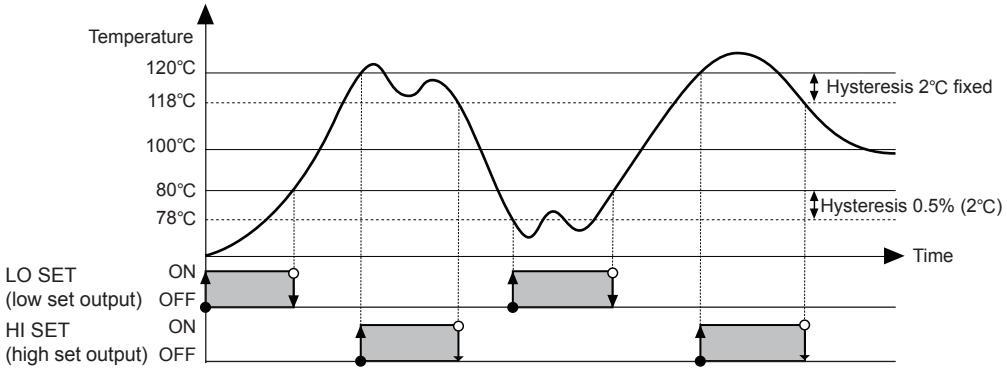

■ Display When Power Is ON

When power is supplied, whole display parts turn ON for 1 sec. It displays model type (digits, size, alarm/sub output and control output, sensor, temp. range, unit). Afterward, it returns to RUN mode.

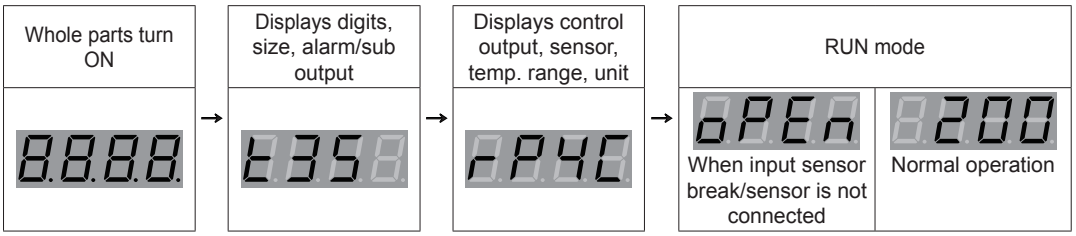

When input sensor break/sensor is not connected, it displays [oPEn]. In case of normal operation, it displays the present input temperature and controls temperature.
※**During displaying model type, control output does not operate.**

■ Control Method (ON/OFF, Proportional Control) Setting

Before supplying power, remove the case and set the control method by the control method setting switch.

T3S	Other Series	Control method setting switch
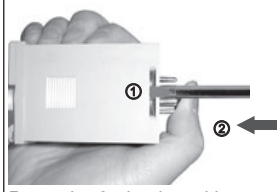 Press the 8-pin plug with your thumb. Insert a flat head driver to the ① groove and uplift the case (same as the other side). Push it to the ② direction and the case is removed.	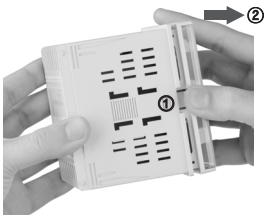 Press the ① with your thumb. Pull the case to the ② direction and it is removed.	Front 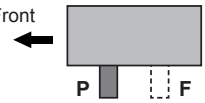 P: Proportional control (default) F: ON/OFF control

■ Error Display and Output Operation

●: ON
○: OFF

Display	Description	Control output※1	Alarm output	Sub output	Dual output	Troubleshooting
oPEn	Flashes when a temperature sensor is broken or not connected.	○	●	○	●	Check the status of the temperature sensor. When the sensor is connected correctly, it is clear.
HHHH	Flashes when the measured input value is higher than the temperature range of the sensor.	○	●	○	●	When the measured temperature is within the temperature range of the sensor, it is clear.
LLLL	Flashes when the measured input value is lower than the temperature range of the sensor.	●	●	●	○	
Su.Er ※2	Flashes with the present value when the set value is out of the temperature range of the sensor.	○	○	○	○	The set value should be within the temperature range of the sensor.

※1: T4LP (Dual setting output) is the single output.
※2: When Su.Er and oPEn/HHHH/LLLL occur at the same time, Su.Er and oPEn/HHHH/LLLL flash in turn and all output turns OFF.